Edbro

Hydraulic Products

Stronger • Lighter • Faster

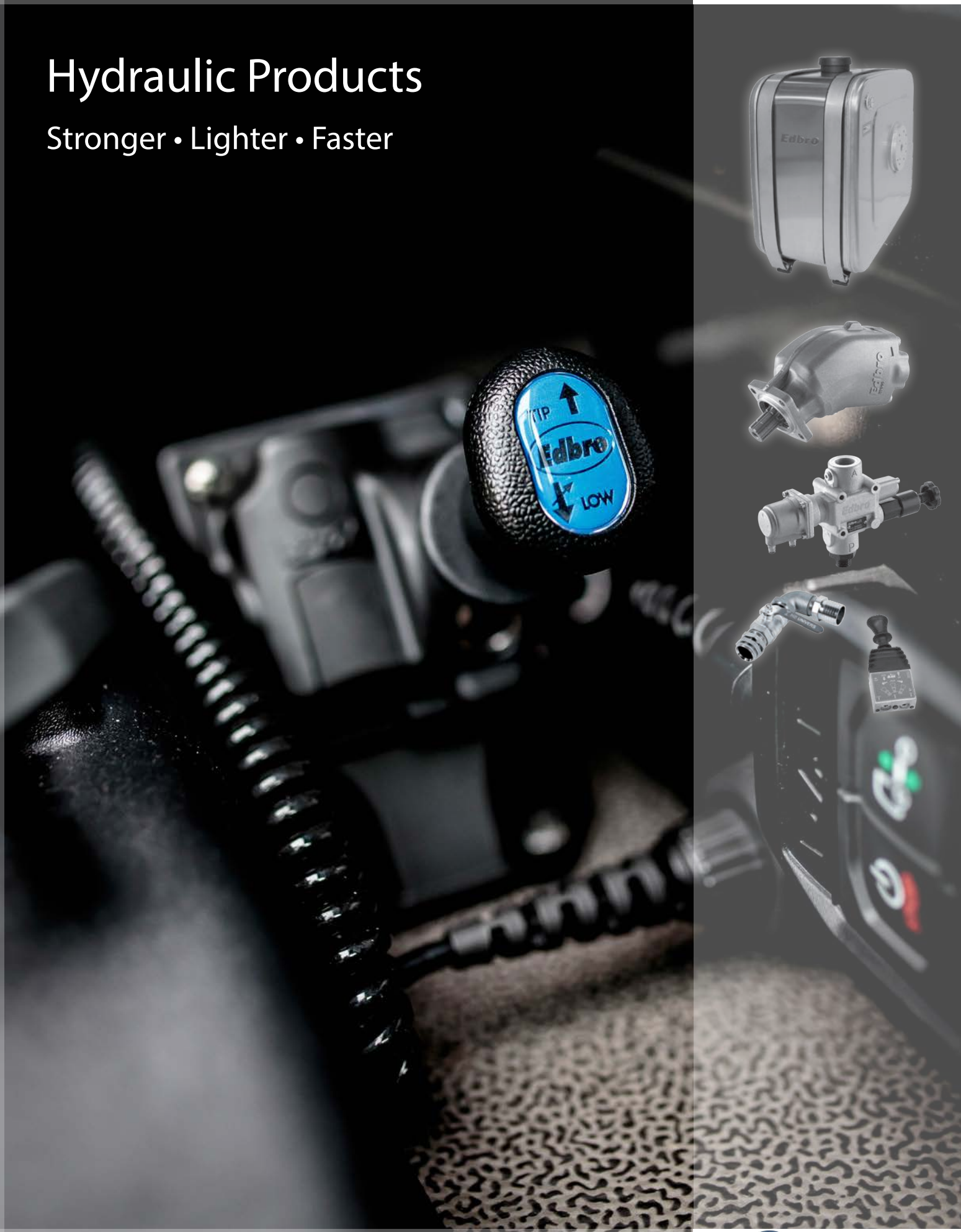

www.edbro.com

ORSAN
TİCARİ ARAÇ SİSTEMLERİ LTD. ŞTİ.

Products for Commercial Vehicles

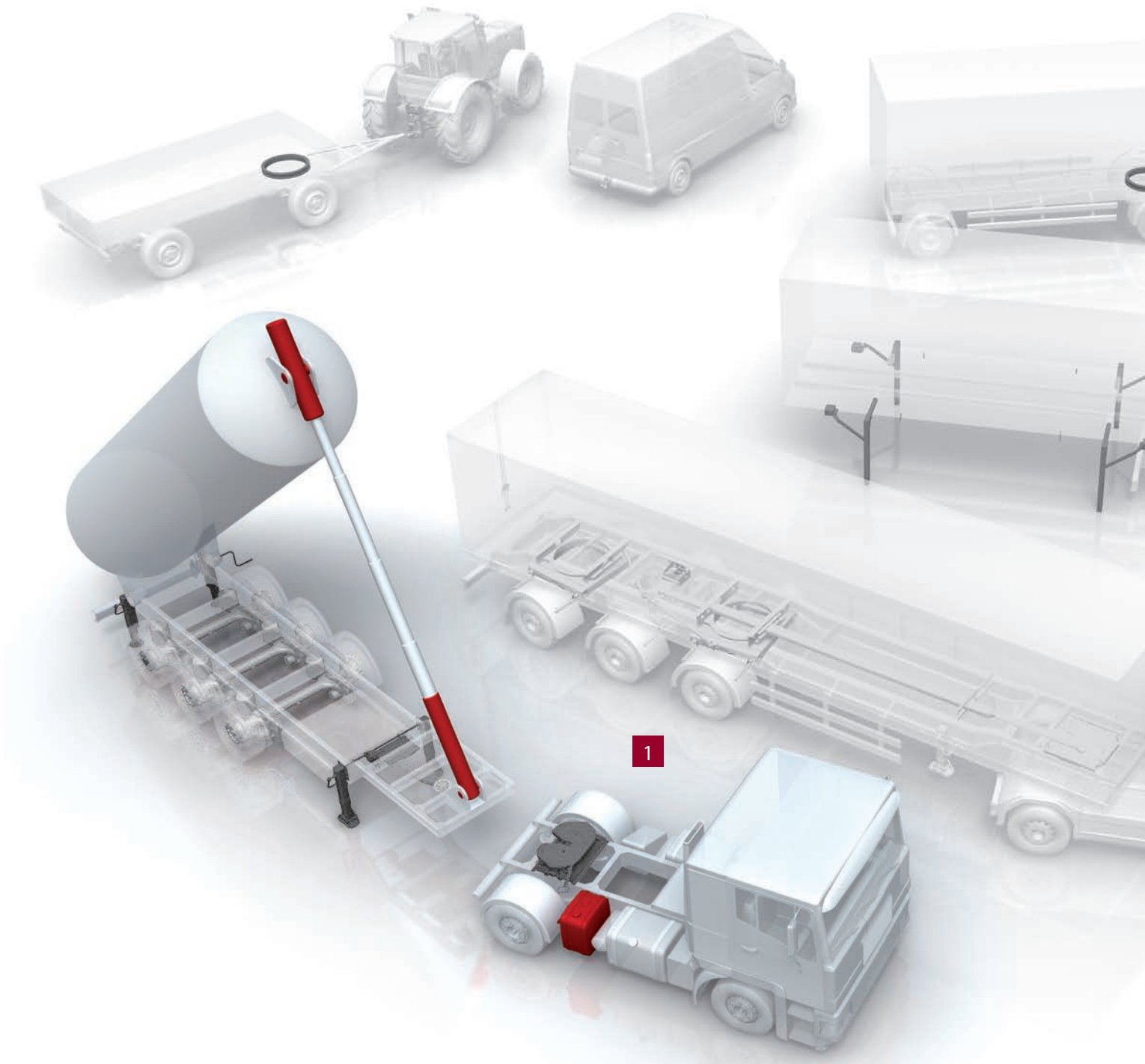

You will find these products in this catalogue

Hydraulic System Components

Index

	Component Overview	7
	Oil Tanks	9 - 10
	Oil Tank Accessories	11
	Filters & Adaptors	12
	Hoses , Fittings & Accessories	13 - 14
	PTO	15
	Gear Pumps	16
	Piston, Dual Flow & Variable Flow Pumps	17 - 20
	Pump Accessories	21 - 22
	Valves	23
	Edbro Tipping Valve UT 200 & Accessories	24
	Tipping Valve CE 250-2B , CT151 & Accessories	25
	Cab Mounted Air Controls	26
	Cab Mounted Air Controls & Accessoriess	27

Index

	Cab Control Accessories & Ob - A3 Moutning Brackets	28
	Hydraulic Control Valves & Accessories	29-30
	Swivel Arms & Hose Mounting Tray	31
	Coupling Mountings & Accessories	32
	Hose Couplings	33-34
	Fittings	35
	Walking Floor & Tanker Hydraulic Connectors	36

Hydraulic “Wet Kits” Individually tailored to your needs

With the accumulated knowledge of more than 100 years, we are constantly working on improvements and solutions to provide you with practical hydraulic equipment according to your requirements.

You are also welcome to use our web site and technical support to assist in creating your individual hydraulic system.

To ensure a fast availability, we have stocks of components strategically located for immediate dispatch for next day delivery if required. “

Assemblies and Individual Parts

Individual components are combined to create tailored hydraulic wet kit solutions, enabling maximum flexibility for our customers.

A basic hydraulic kit would consist, for example, of the assemblies and individual articles shown below. Depending on requirements, these can be expanded and / or adapted according to your requirements.

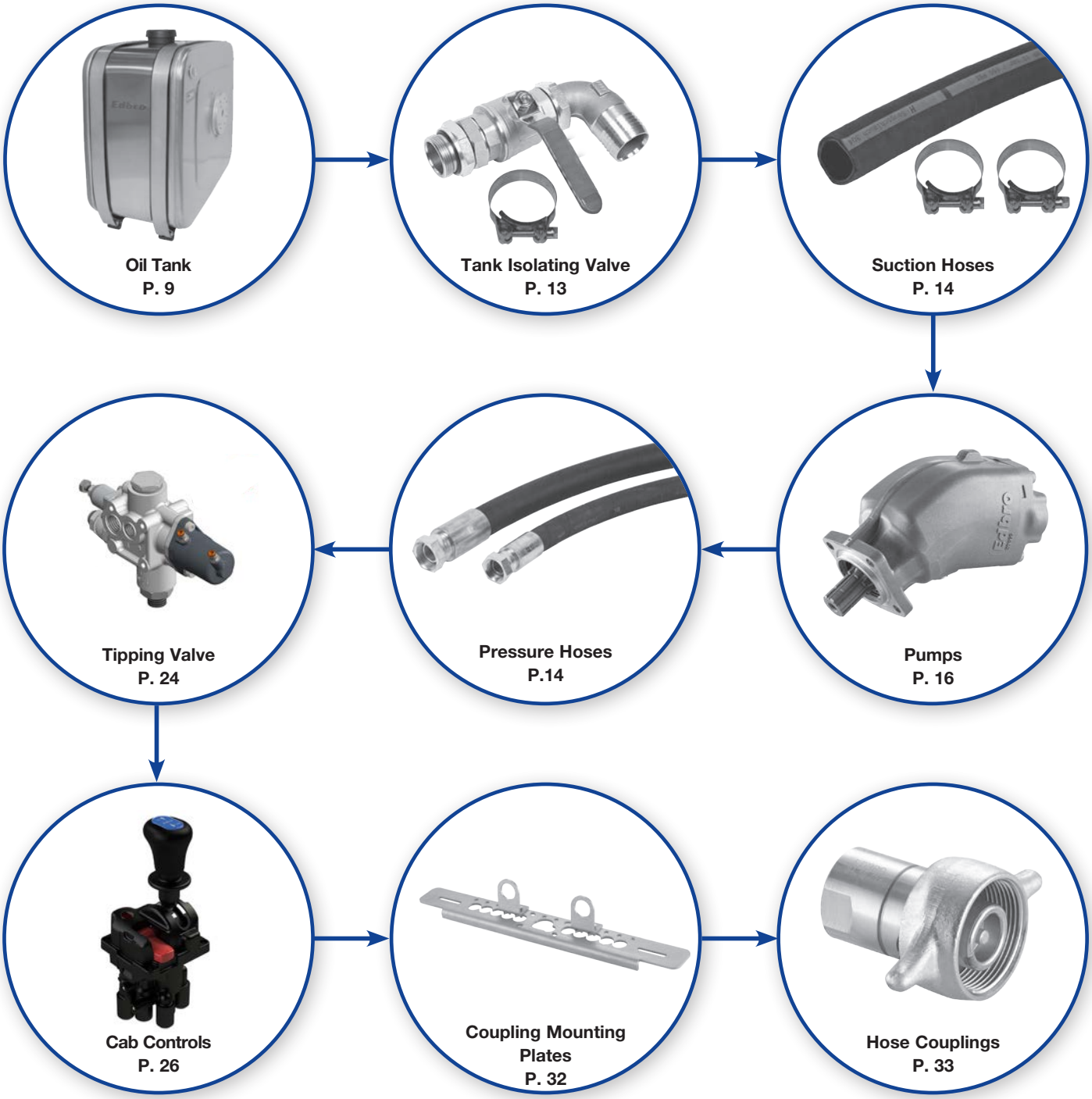

Complete Hydraulic System

Complete Hydraulic system includes all seals and connectors

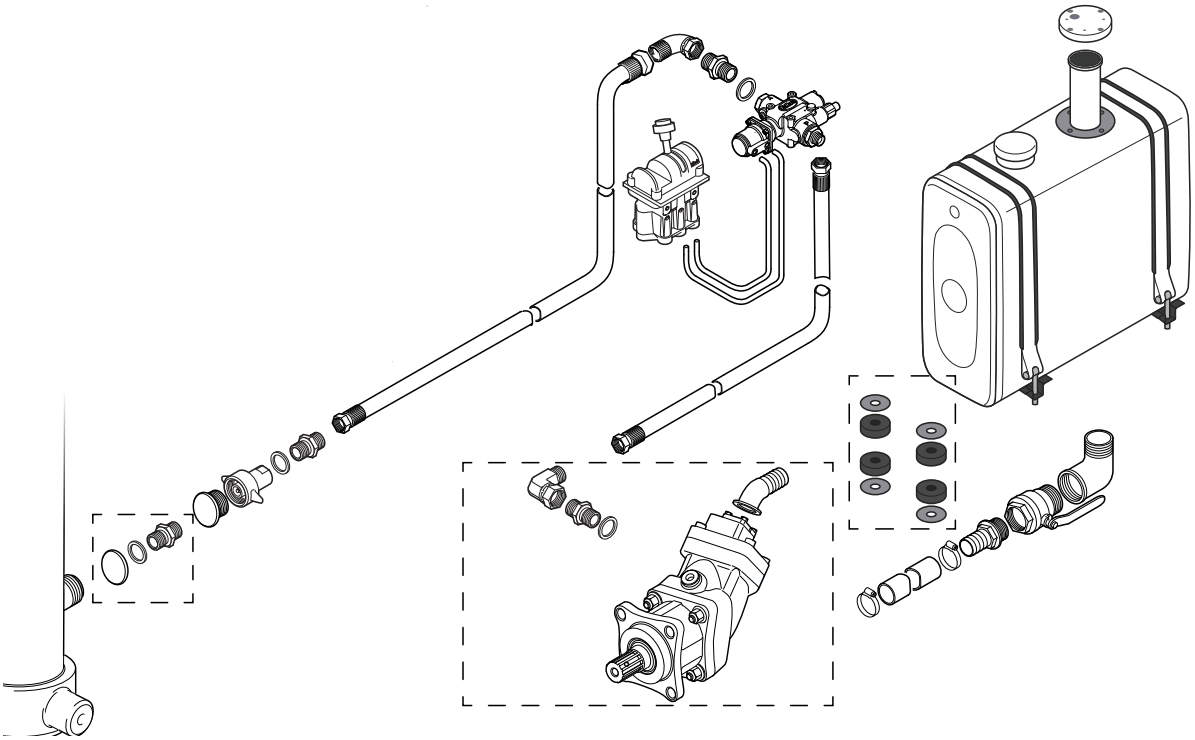

Typical Single line Tipper system

Components
1. Tank
2. Ball Valve
3. Suction Hose
4. Pump
5. Delivery Hose 1
6. Tipping Valve
7. Delivery Hose 2
8. QD Coupling
9. Mounting Plate
10. Cab Control Valve

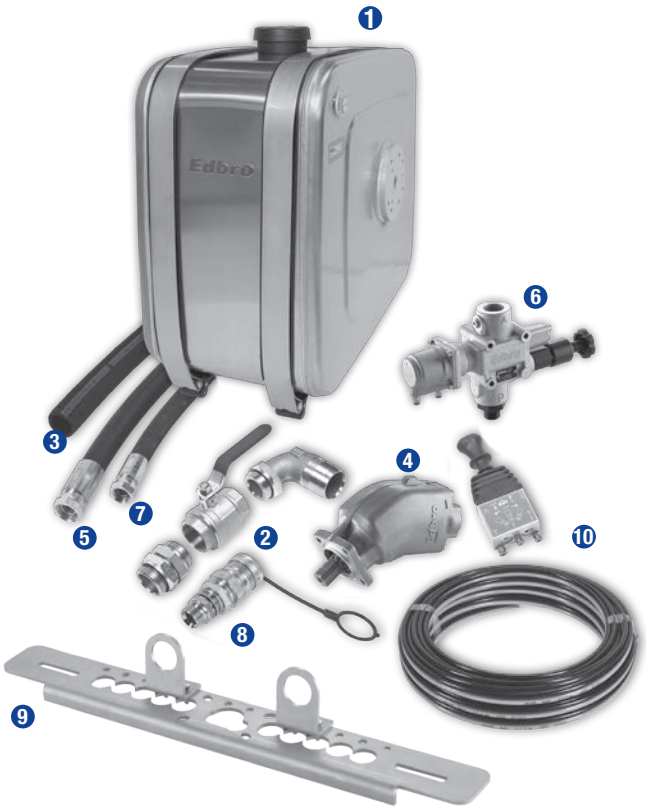

Oil Tanks

Side Tank – Steel

Item N°	Detail	Useable Volume (l)	Length (mm)	Depth (mm)	Height (mm)	Bracket	Markets
OT543/53		53	370	430	530	TH54	UK
OT544/60		60	410	430	530	TH54	UK
OT674/135		135	430	720	610	TH674/P	UK
OTA724A	1	135	385	720	720	Included	UK
OTPS 40-71-64	1	135	400	706	636	Included	EU
OTPS 50-71-64	1	170	500	706	636	Included	EU

***AF97/AF100 required as seperate order line**
1 Top mount filter apperture(See page 11 , 12 for adaptor plate & filter options)

Side Tank – Aluminium

Item N°	Detail	Usable Volume (l)	Length (mm)	Depth (mm)	Height (mm)	Markets
OT884A/160/01	5	160	360	795	785	UK
OT674FAL/130	1, 6	130	400	706	636	EU
OT674FAR/130	2, 6	130	400	706	636	EU, UK
OT674FAT/130	3, 6	130	400	706	636	EU
OT675FAL/160	1, 6	160	500	706	636	EU
OT675FAR/160	2, 6	160	500	706	636	EU, UK
OT676FAL/195	1, 6	195	600	706	636	EU, UK
OT676FAR/195	2, 6	195	600	706	636	EU, UK
OTSA55-61-61	3, 4	170	550	610	610	EU
OT774AF/145/02	6, 7	160	400	750	722	UK

***Tank mounting brackets included**
***AF97/AF100 required as seperate order line**

1 Mount plate for CT valve on left side
2 Mount plate for CT valve on right side
3 Mount plate for CE val ve on both sides
4 OTSA55 specially designed for behind the side panel
5 OT884A/160/01 specially designed for the DAF XF FTG 6x2LS 3950
6 Top mount Filter apperture
7 No valve side mounting plate

(See pages 11 , 12 for adaptor plate & filter options)

Rear of Cab Mounted Tank – Steel Rigid Chassis *(Filter Included)*

Item N°	Detail	Usable Volume (l)	Length (mm)	Depth (mm)	Height (mm)	Markets
OT635F/65/02	1	65	500	270	638	EU, UK
OT637F/84/02	1	84	700	270	638	EU, UK
OT637FN	2	84	700	270	638	EU
OT637NB/84/02	3	84	700	270	638	EU
OT639F/105/02	1	105	910	270	638	EU, UK

***AF97/AF100 required as seperate order line**

1 Paint finish grey. Mount Plate for CT Valve. Integrated 60 micron return filter
2 Paint finish black. No valve mounting plate.
3 As per 1, no feet

Rear of Cab Mounted Tank – Steel Tractor Chassis (Oil Filter included)

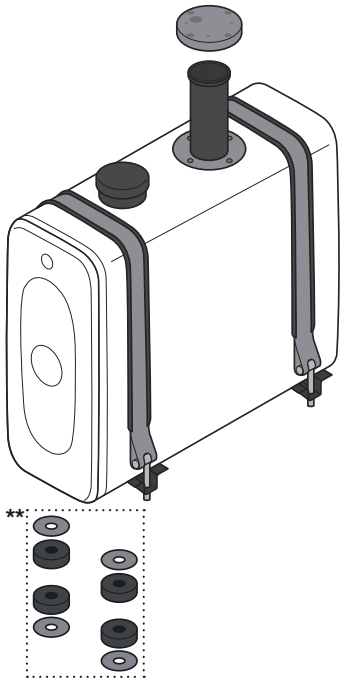

Item N°	Useable Volume (l)	Length (mm)	Depth (mm)	Height (mm)	Markets
OT7310F/135/03	135	970	280	700	EU, UK
OT7311F/155/03	155	1100	280	700	EU, UK
OT7314F/193/03	193	1390	280	700	EU, UK

***AF97/AF100 required as seperate order line**

****TMK3 mounting kit**

Steel Tank – Underbody

Item N°	Useable Volume (l)	Length (mm)	Depth (mm)	Height (mm)	Suction Port	Markets
OT144/10	10	370	360	160	1.0”	EU
OT344/29	29	370	360	300	1.0”	UK

Finish - Grey Primer

Steel Tank – Tanker and Heavy Transport

Item N°	Useable Volume (l)	Length (mm)	Depth (mm)	Height (mm)	Suction Port	Markets
OTS 64-36-29TW	58	640	320	290	1.25”	EU
OT442/18	18	420	174	400	1.0”	UK

***AF97/AF100 required as seperate order line**

OT442/18

Includes Valve Block to suit:
CT041 , PM453
PM457, PM552

***Apature blanking plate TDKT2 if required**

OTS 64-36-29 TW

Note* OTS64-36-29TW is supplied with filler breathers.

Oil tank accessories / spare parts

Oil Tank Filler Breather

- Tank cap with filter
- Attach with 6 appropriate screws provided with breather

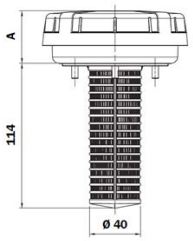

Description	Height A	Item N°	Spare Element
Oil tank filler breather	56 mm	AF97	AF98
Oll tank filler breather	41mm	AF100	AF101

Tank Mounting Straps

Description	Item N°
Tank mounting strap set OT67xxx series Consists of two straps with screws and rubber pads	TH071-SB-SET

Tank Mounting Bracket OT67 Series Alum Tanks

Description	Item No..
Tank mounting bracket	TH071
Rubber pad for bracket	TH071-GU

Adaptor plate c/w Filter

Item N° PM662

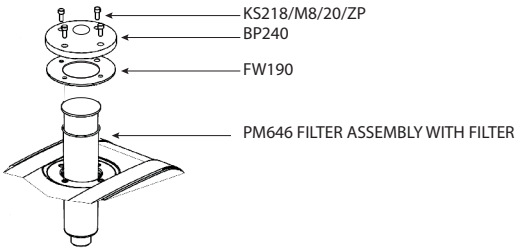

Adapter Plate for UT valve on tanks with KDF plate

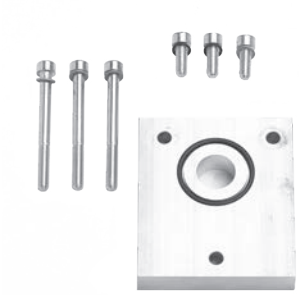

Description	Item N°
Plate	CT-ADKA
O-Ring	HD-OR147
Socket Cap Head Screw	W-MO-M8x20
Socket Cap Head Bolt	W-MO-8x85
Shake Proof Washer	W-MO-S8

Oil Tank Cover plate

Description	Item No
Cover Plate	R921100 PM
Gasket	FW190 FW

Adaptor plate

Description	Item N°
Adaptor Plate	TDKT1
Cover Plate	TDKT2

Taper ShimsAm dit vivicae consicit pati, dum am

TH-L01

SC-UK5

Description	Size	Item N°
Taper Tank Mounting Shims	220x60 mm	TH-L01
Taper Tank Mounting Shims	220x60 mm	SC-UK5

Return Filters and Accessories

Internal Return Filter with Breather

Item N°	Description	Height of top	Port (BSP)	Flow l/min	Element Grade	Filter Material	Mounting P.C.D x Qty x Ø
ARGO	Filter	86 mm	1”	200	60 µ	RP	115 x 2 x 11
ARGO-FE	Element Only				60 µ	RP	

** Removeble cap for access to element*

Internal Return Filter (Element accessible from top)

Item N°	Description	Height of top	Port (BSP)	Flow l/min	Filter Grade µ	Filter Material	Mounting PCD x QTY x Ø
PM476	Filter Complete	100 mm	1”	300	25	RP	115 x 2 x 11
PM627	Filter Complete	100 mm	1.25”	300	25	RP	115 x 2 X 11
PM628	Replacement Element				25	RP	

** Removeble cap for access to element*

Return Filter

Item N°	Description	Height of top	Port (BSP)	Flow l/min	Filter Grade µ	Filter Material	Mounting PCD x QTY x Ø
PM642	Filter	60 mm	1”	300	25	RP	115 x 2 x 11
PM642/01	Element only				25	RP	115 x 2 x 11
PM642/02	Filter no element						115 x 2 x 11
PM643	Filter	60 mm	1”	200	60		115 x 2 x 11
PM643/01	Element only				60	S	115 x 2 x 11
PM646	Cartridge, element				60	SS	115 x 2 x 11

** For tractor upright tanks only*
** Low Profile*

In-line Return Filter

Item N°	Description	Height of top	Port (BSP)	Flow l/min	Filter Grade µ	Filter Material	Max P Bar
PM478	Filter CW indicator	355 mm	1.5”	200	10	RP	30 Bar
PM480	Spin on cartridge spare				10	RP	

Filter Material	
RP	Resin Impregnated Paper
S	Steel
SS	Stainless Steel

When using return flow filters without an integral breather, it is essential to ensure that there is a filler breather on the hydraulic oil tank of sufficient capacity to accommodate pressure differentials due to flow and return.

Suction Fittings

Double Nipple

Item N°	Thread	Thread	Type
NR1769	1.5” BSPM	1.5” BSPM	A
NR1763	1.5” BSPT	1.5” BSPT	B
NR1657	1.5” BSPM	2” BSPM	B
RI50x2-1.1/2*	50 x 2mm M	1.5” BSPM	C
RI68x2-1.1/2**	68 x 2mm M	1.5” BSPM	C

***Suitable only for combination tank with suction socket 50 x 2mm**
****Suitable only for Daimler Kombi oil / fuel tank**

Elbow

Item N°	Thread	Thread	Type
NRZ4-R1.1/2	1.5” BSPM	1.5” BSPF	A
NR1544	1.5” BSPTM	1.5” BSPF	B
NR1642	2” BSPTM	2” BSPTF	B

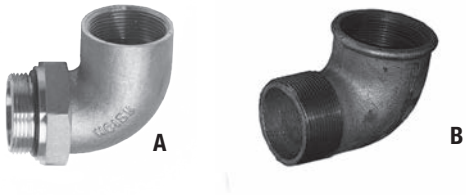

Socket

Item N°	Thread	Thread
NR1764	1.5” BSPF	1.5” BSPF

Tee

Item N°	Thread
NRT-1.1/2”	3 x 1.5” BSPF

Ball Valves

Item N°	Thread	Thread	Type
VS6	2” BSPF	2” BSPF	A
VS7	1.5″ BSPM	1.5″ BSPF	A
VS10	1.5″ BSPF	1.5″ BSPF	A
VOTPA	1.5″ BSPM	1.5″ BSPF	B

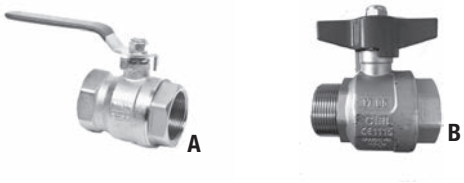

Gate Valves

Item N°	Thread	Thread
VS11	1.5” BSPF	1.5” BSPF
VS12	2” BSPF	2” BSPF

Ball Valve Kit

Item N°	Fitting	Hose	Style
BVK01	1.25” BSPM	1.5”	A
BVK02	1.5” BSPM	1.5”	A
ABKU50-OR	1.5” BSPM	2.0”	B

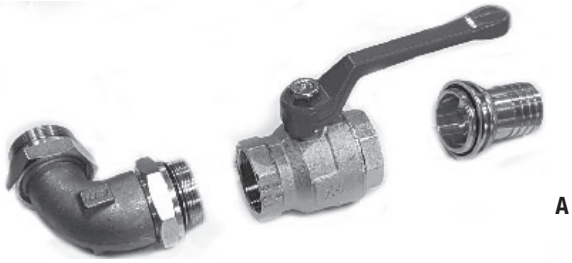

Hoses

Edbro supply a comprehensive range of Pressure and Suction hoses in different sizes, with various connections, lengths and pressure configurations. Contact your local representative with your application / requirements.

(Pressure hoses up to 350bar Sizes 0.75”) to 1 1/4” (1.25”) End connections straight or elbows.
Low pressure suction hoses – Sizes 1. 1/4” – 2”

Hose - Accessories

Hose Clamp

Item N°	Size (mm)	Style
SF97/3	32-50	A
SF97/4	59-63	B

A

B

Pipe Clamp

Item N°	Size (mm)
RS20	20
RS25	25

Hose Clamp

Item N°	Size (mm)
SH37	37
SH43	43

Pipe Clip

Item N°	Size (mm)
SH-K31	31
SH-K39	39
SH-K52	52
SH-K63	63

PTO' s

This page shows only a selection of the range and applications available.Contact your local sales representative for more information.

Block PTO

- Direct coupling PTO for ZF transmission
- Pressure switch with bayonet connection
- Pneumatic control

Two Wheel Offset PTO

- Offset coupling PTO for ZF transmission
- Pressure switch with bayonet connection
- Pneumatic Control
- Speed and torque variants available

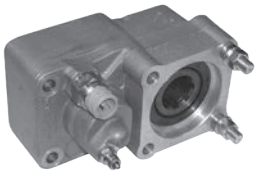

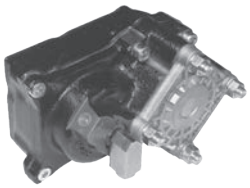

Quill Shaft

- Connects transmission to rear-mounted PTOS
- Gearbox specfic solutions

PTO and Quill Shaft Mountings

- Gearbox specific Solutions

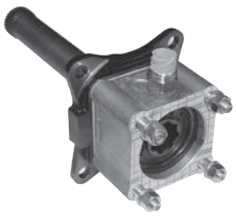

Side Mount PTO

- Side mount PTO for Scania
- Pneumatic Control

PTO Extension

- Extention to offset pump from PTO

Item N°	Distance
SA3111	85MM
SA3112	125MM

Drive Shaft Flange Adapter

Other applications availiable

Item N°	PCD
X3/F5	90MM
X3/F6	100MM

4 / 3 Bolt Adapters

Item N°	PTO	Pump
SA3009	3-bolt	4-bolt
SA3017	4-bolt	3-bolt

SA3009

SA3017

Hydraulic Pumps

Gear Pumps – Tipper Application

- A Range of flows from 17 to 125cm³/rev
- Compact size for easy installation
- Ideal for close coupled PTO mounting
- 4 - Hole ISO7653 Mounting flange
- Bronze thurst plates for maximum durability
- Bi-directional Pumps from 43-120cm

Ordering Code			
Type	Displacement	Working Pressure	Rotation
EGP	xxx cc/rev	xxx bar	( ) Anticlockwise (Left)
			C Clockwise (Right)
			R Bi-Directional
			A Anticlockwise Special

Example: EGP 082 220 R

Edbro Gear Pump 82 CC/rev, 220 bar nominal, bi-directional rotation

Item N°	Displacement	Pressure		Max. Speed		Dimensions		Ports BSP		Weight	Style
	cc/rev	P1	P2	Continuous	Intermittent	A	B	In/Side	Out/Rear	kg	
EGP017315	17	315	325	2500	3000	168.5	119.5	0.5”	0.5”	11	A
EGP027315	26	315	325	2500	3000	174.5	124	0.75”	0.5”	12	A
EGP034300	34	300	310	2200	2800	179.5	125	0.75”	0.75”	13	A
EGP043250R	43	240	250	1700	2250	185.5	130	0.75”	0.75”	14.3	C
EGP061240R	60	200	210	1500	1800	196.5	136.5	1.0”	1.0”	15.3	B
EGP082220R	81	180	190	1400	1700	209.5	140.5	1.0”	1.0”	16.3	B
EGP090220R	90	180	190	1400	1700	211	149	1.25”	1.0”	17.3	B
EGP100220R	98	180	190	1400	1700	226.5	154.5	1.25”	1.25”	15.8	C
EGP112225R	112	225	240	1800	2700	238.5	161.5	1.25”	1.25”	20	B
EGP120215R	122	215	230	1500	2500	242.5	165.5	1.25”	1.25”	20.2	B
EGP125150	123	180	200	1500	1800	242.5	158.5	1.25”	1.0”, 0.75”	17	A

P1 Max. Intermittent Pressure *(20 sec. max.)*
P2 Max. Peak Pressure *(6 sec. max.)*

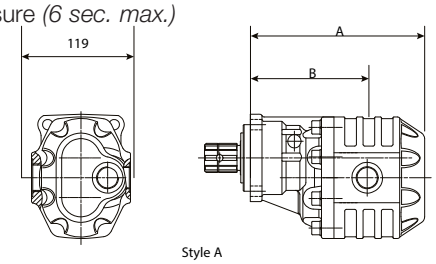

Style A

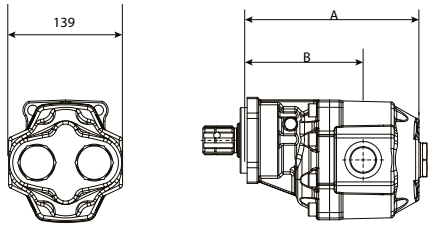

Style B

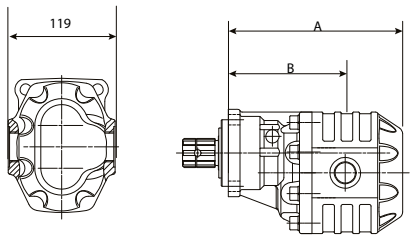

Style C

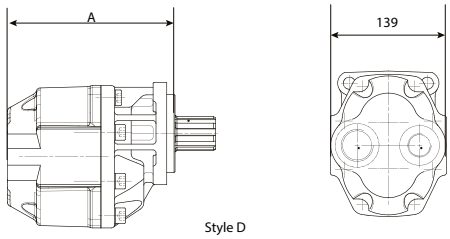

Style D

Spline shaft DIN 5462 / ISO14
Mounting Flange ISO 7653 - D

Hydraulic Pumps

Piston Pumps

- Single piece, lightweight body
- Ideal for close coupled PTO mounting
- Reversible rotation during or after installation
- Standard ISO 7653-D Mounting Flange
- Available as pump only, or as a kit containing pump and hydraulics fittings

Ordering Code

Type	Displacement	Working Pressure	Rotation	Inlet Size	Inlet Angle	Outlet Size	Outlet Angle
EGP Piston Pump	xxx cc/rev	30 300 Bar	A Anticlockwise (Left)	15 1.5”	0 Straight	4 G0.5”	0 Straight
		41 400 Bar	C Clockwise (Right)	20 2.0”	4 45°	6 G0.75”	4 45°
				25 2.5”	9 90°	8 G1.0”	9 90°

Examples:

Pump Only: EBA 064 30 C — Edbro Bent-Axis Piston Pump. 64 cc/rev, 300 bar, Clockwise rotation

Pump Kit: EBA 084 41 A 15 0 8 4 — Edbro Bent-Axis Piston Pump. 64 cc/rev, 300 bar, Anticlockwise rotation in a kit also containing: 1.5” Straight hose-tail suction inlet, G1.0” 45° pressure outlet

Tipper Applications (300 bar)

Item N°	Displacement cc/rev	Max Pressure Bar	Rotation	Max RPM Continuous	Dimensions A	B	C	Outlet Size	Weight kg	Spare Seal Kit
EBA04730A	47	300	ACW	1900	235	115	111	G 0.75”	9.8	SKEBA040
EBA04730C	47	300	CW	1900	235	115	111	G 0.75”	9.8	SKEBA040
EBA06430A	64	300	ACW	1900	235	115	111	G 0.75”	9.8	SKEBA040
EBA06430C	64	300	CW	1900	235	115	111	G 0.75”	9.8	SKEBA040
EBA09030A	90	300	ACW	1500	235	115	111	G 0.75”	9.8	SKEBA084
EBA09030C	90	300	CW	1500	235	115	111	G 0.75”	9.8	SKEBA084
EBA13030A	130	300	ACW	1500	264	133	118	G 1.0”	13.9	SKEBA084
EBA13030C	130	300	CW	1500	264	133	118	G 1.0”	13.9	SKEBA084

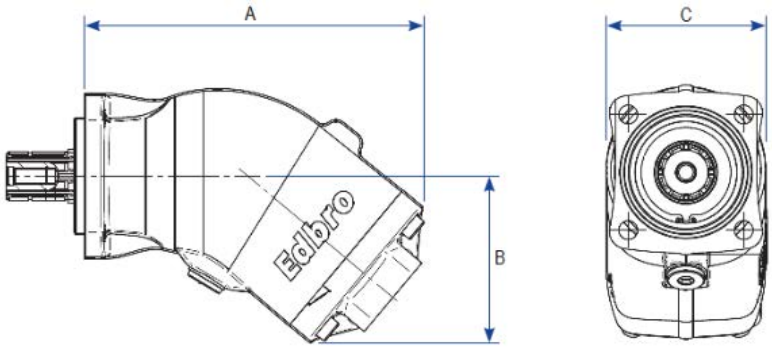

Spine shaft DIN 5462 / ISO14
Mounting Flange ISO 7653 - D

Hydraulic Pumps

Piston Pumps

- Single piece, lightweight body
- Ideal for close coupled PTO mounting
- Reversible rotation during or after installation
- Standard ISO 7653-D Mounting Flange
- Available as pump only, or as a kit containing pump and hydraulics fittings

Crane Applications (400 bar)

Item N°	Displacement cc/rev	Max Pressure Bar	Rotation	Max RPM Continuous	Dimensions A	B	C	Outlet Size	Weight kg	Spare Seal Kit
EBA01241A	12.6	400	ACW	2300	206	102	97	G 0.75”	6.9	SKEBA012
EBA01241C	12.6	400	CW	2300	206	102	97	G 0.75”	6.9	SKEBA012
EBA01741A	17	400	ACW	2300	206	102	97	G 0.75”	6.9	SKEBA012
EBA01741C	17	400	CW	2300	206	102	97	G 0.75”	6.9	SKEBA012
EBA02541A	25.4	400	ACW	2300	206	102	97	G 0.75”	7.1	SKEBA012
EBA02541C	25.4	400	CW	2300	206	102	97	G 0.75”	7.1	SKEBA012
EBA03441A	34.2	400	ACW	2300	206	102	97	G 0.75”	7.1	SKEBA012
EBA03441C	34.2	400	CW	2300	206	102	97	G 0.75”	7.1	SKEBA012
EBA04041A	41.2	400	ACW	1900	235	115	111	G 0.75”	9.8	SKEBA040
EBA04041C	41.2	400	CW	1900	235	115	111	G 0.75”	9.8	SKEBA040
EBA04741A	47.1	400	ACW	1900	235	115	111	G 0.75”	9.8	SKEBA040
EBA04741C	47.1	400	CW	1900	235	115	111	G 0.75”	9.8	SKEBA040
EBA05641A	56	400	ACW	1900	235	115	111	G 0.75”	9.8	SKEBA040
EBA05641C	56	400	CW	1900	235	115	111	G 0.75”	9.8	SKEBA040
EBA06441A	63.6	400	ACW	1900	235	115	111	G 0.75”	9.8	SKEBA040
EBA06441C	63.6	400	CW	1900	235	115	111	G 0.75”	9.8	SKEBA040
EBA08441A	83.6	400	ACW	1600	264	133	118	G 1.0”	13.9	SKEBA084
EBA08441C	83.6	400	CW	1600	264	133	118	G 1.0”	13.9	SKEBA084
EBA10841A	108	400	ACW	1600	264	133	118	G 1.0”	13.9	SKEBA084
EBA10841C	108	400	CW	1600	264	133	118	G 1.0”	13.9	SKEBA084

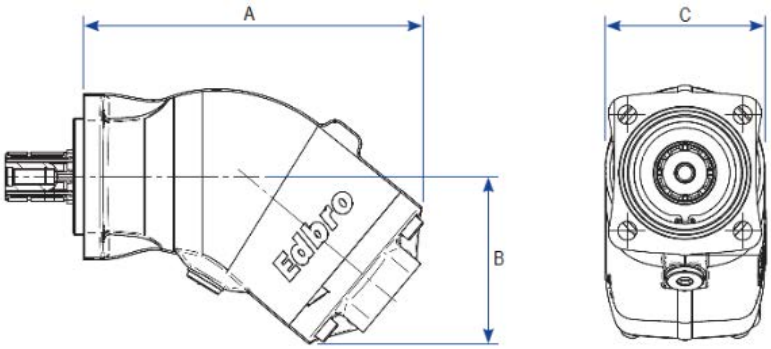

Spline shaft DIN 5462 / ISO14
Mounting Flange ISO 7653 - D

Hydraulic Pumps

Dual Flow Pumps

- 10 models in 2 styles
- Compact size for easy installation
- Ideal for close coupled PTO mounting
- 4 - Hole ISO7653 Mounting Flange
- Smooth operation, low noise levels

Ordering Code

Type	Displacement	Displacement 2	Working Pressure	Rotation
EBA Piston Pump	xxx cc/rev	xxx cc/rev	xxx Bar	( ) Anticlockwise (Left)
				A Anticlockwise (Left)
				C Clockwise (Right)

Example: EBA 040 / 020 350 A Edbro Bent-Axis Piston Pump. 64 cc/rev, 300 bar, Clockwise rotation

Item N°	Displacement cc/rev	Max Pressure Bar	Max RPM Continuous	Dimensions A	Dimensions B	Weight kg	Style
EBA020/020350	20.3 / 20.3	350	2200	133	50	22	A
EBA028/028350	27.5 / 27.5	350	1800	133	50	22	A
EBA040/020350	40.7 / 20.3	350	2200	133	50	22	A
EBA035/035330	33.9 / 33.9	330	2200	133	50	22	A
EBA056/028350	54.9 / 27.5	350	1800	166	64	22	A
EBA046/046330	45.8 / 45.8	330	1800	166	64	22	A
EBA053/053330	52.5 / 52.5	330	1600	166	64	22	A
EBA064/032350	63 / 31.5	350	1600	166	64	22	A
EBA076/076350A	75 / 75	350	1500	-	-	23.2	B
EBA076/076350C	75 / 75	350	1500	-	-	23.2	B

Style A

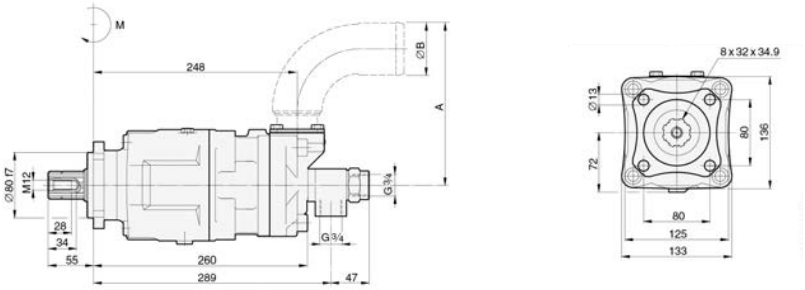

Style B

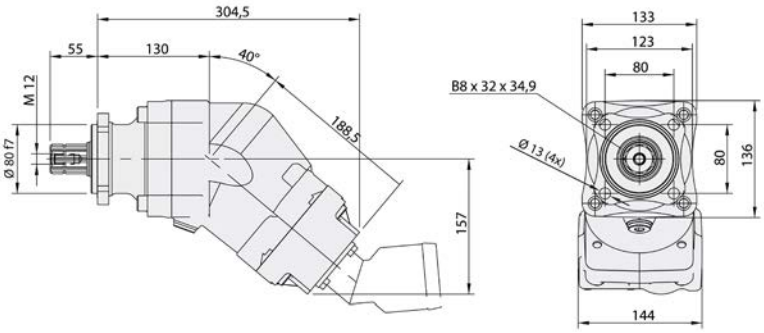

Spline shaft DIN 5462 / ISO14
Mountiing Flange ISO 7653 - D

Variable Flow Pumps

- Variable axial piston pumps
- Direct installation onto a PTO
- Compact installation dimensions
- Externally drained for effective cooling
- Clockwise & Anticlockwise rotation available

Ordering Code

Type	Displacement	Nominal Pressure	Type	Rotation
EGP Piston Pump	xxx cc/rev	40 400 bar	V Variable Flow	( ) Anticlockwise (Left)
				C Clockwise (Right)

Example: EBA 092 40 V C

Item N°	Displacement	Max Pressure	Rotation	Max RPM	Dimensions, (mm)				Drive Torque	Weight
	cc/rev	Bar		Continuous	A	B	C	D	Max, Nm	KG
EBA06240V	62.4	400	ACW	2500	254	115	102	98.5	430	24
EBA06240VC	62.4	400	CW	2500	254	115	102	98.5	430	24
EBA09240V	87.2	400	ACW	2300	277	120	101	106	530	27
EBA09240VC	87.2	400	CW	2300	277	120	101	106	530	27
EBA11240V	110.4	400	ACW	2200	279.5	127	106	111	900	30
EBA11240VC	110.4	400	CW	2200	279.5	127	106	111	900	30
EBA13040V	130	400	ACW	2100	269.5	130	109	114	900	30.8
EBA13040VC	130	400	CW	2100	269.5	130	109	114	900	30.8

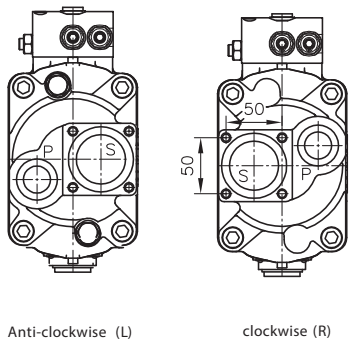

Anti-clockwise (L) clockwise (R)

Rotation direction
(facing the input shaft)

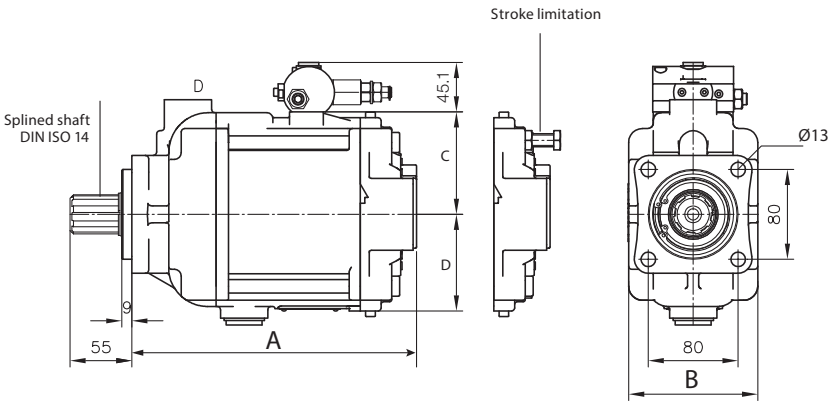

P = Pressure outlet G1”
S = Flange, Suction port

Piston Pumps: By-Pass Valve

By-Pass Valve PM504/PM505

The Edbro By-Pass valve is ideal for use in situations where it is inconvenient to disengage the PTO during operation. It is ideal for applications such as road maintenance vehicles, concrete mixers, refuse trucks etc…

Features of the By-Pass valve include:

- Operated from the cab
- Can also be operated manually
- Compact design, direct mounting to pump
- Can be regulated from 0-400 bar working pressure
- Symmetrical designs, allows flexible mounting, and use on clockwise and anti clockwise pumps

KIT CONTENTS

- By Pass Valve
- 2m Cable
- Installation hardware

BY-PASS VALVE		PM504	PM505
Weight	kg	2.4	3.0
Max working pressure	bar	400	400
Max pump speed	rpm	012-034 047-064 3000 2500	084-108 2000
Magnet voltage	V	12 / 24	12 / 24
Current	A	1 / 0.5	1 / 0.5
Power	W	12	12
Protection class contact		IP 66 - / ADR	IP 66 - / ADR
Function		Normally Open	Normally Open
Dimensions (mm)	A	45	41
	B	110	127
	C	36	42
	D	3/4” BSP	1” BSP
	E	100	116
	F	25	28
	G	31	31

Connection 0.75” BSP for possible cooling line

Connection 1/8” BSP for system pressure management

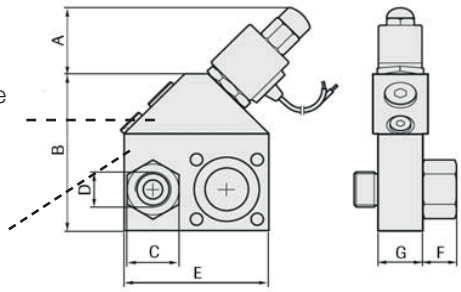

When the hydraulic system is equipped with a closed-centre valve or another type of valve, which has a circulation pressure of 0.15 MPa or more, a separate cooling line must be connected to create oil circulation and cooling of the pump.

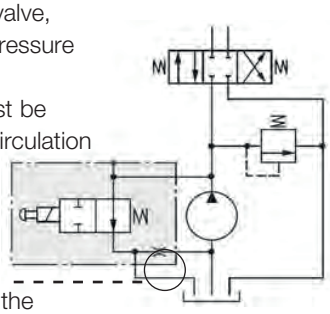

The connection to the oil tank should be below the oil level.

Hydraulic Pump – Equipment

Low Pressure Adaptors – Piston Pumps

	1.5”			2.0”			2.5”	3.0“
Pump	**Straight**	**45°**	**90°**	**Straight**	**45°**	**90°**	**45°**	**45°**
EBA012	NR1612	NR1588	NR1589	NR1613	NR1590	NR1591	-	-
EBA017								
EBA025								
EBA034								
EBA040								
EBA047								
EBA056								
EBA064							NR1634	
EBA090								
EBA084	NR1614	-	NR1603	NR1615	NR1608	NR1605	NR1740	NR1749
EBA108								
EBA130								
All Variable Flow								
All Dual Flow								

Low Pressure Adaptors – Gear Pumps

Suction Nipple

Item N°	BSP M	Hose
NR1767	1.0”	1.5”
NR1674	1.25”	1.5”
NR1768	1.25”	2.0”
NR1541	1.5”	1.5”
NR1714	1.5”	2.0”
NR1643	2.0”	2.0”

Suction Elbow 45° Positional

Item No.	BSP M	Hose
NR1765	1.0“	1.5“
NR1742	1.25“	1.5“
NR1683	1.25“	2.0“
NR1766	1.5“	2.0“

Suction Elbow 90° Positional

Item N°	BSP M	Hose
NR1672*	0.5”	1.25”
NR1716	0.75”	0.75”
NR1678	0.75”	1.0”
NR1679	0.75”	1.25”
NR1644*	0.75”	1.5”
NR1681	1.0”	1.25”
NR1664*	1.0”	1.5”
NR1680	1.0”	2.0”
NR1639*	1.25”	1.5”
NR1682*	1.25”	2.0”
NR1755*	1.5*	2.0”

*Typical gear pump applications

Gasket

Gaskets for pump flanges (Paper)

Item N°	
FW188	ISO Gasket

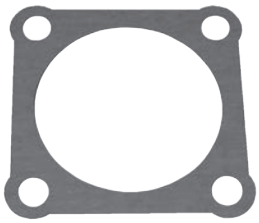

Mounting Kit

Mounting Kit
Studs and Nuts
Stud M12 x 48mm Lg
threaded 15mm one
end 25mm other

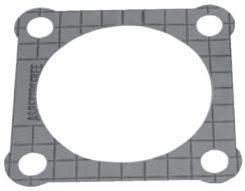

Item N°
SA3010

Pump Flange

Item N°	OD	N° of Bolts
FL05	90mm	4 Bolt
SA2958	100mm	6 Bolt

Both flanges center screw fixing

Valves

Pressure Relief Valve 120 l /min

- Port Size G0.75”
- Flow 120 l/min

Item N°	Relief Pressure (bar)
V015150	150
V015175	175
V015250	250

Pressure Relief Valve 160 l /min

- Port Size G1.0”
- Flow 160 l /min

Item N°	Relief pressure (bar)
V016150	150
V016175	175

Pressure Relief Valve 180l /min

- Port Size G1.0”
- Flow 180 l/min
- Max Pressure 300 bar

Item N°	Relief Pressure (bar)
OV114/150	150
OV114/250	250

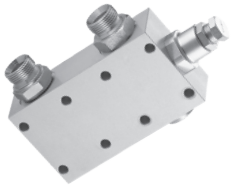

Flow Regulator

- Max Pressure 270 bar

Item N°	Port Size	Flow	Return Flow l /min
L-RFP-A-34-A	G 0.75”	150	90
L-RFP-A-10-A	G 1.0”	280	190

Pressure Relief Valve

- Port Size: 1”
- Flow: 120 l/min
- Max. Pressure 350 bar
- Working Pressure 170 bar

Item N°: DA20-150

Diverter Valve with Intergrated Pressure Relief Function

- Port Size G0.75”
- Working Pressure: 320 bar
- Maximum Pressure: 400 bar
- Relief valve Range: 100-320 bar
- Standard RV setting: 320 bar
- Relief valve adusjtment = 75 bar / turn

Item N° A15060404.00

High Pressure Ball Valve

- 2 Port
- Max Pressure 210 bar

Item N°	Port Size
KU20	G0.75”
KU25	G1.0”

Ball Valve Spring Centered

Item N°	max. Pressure bar
KU10F (1”)	210
KU20F (0.75”)	210

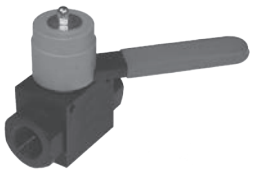

Diverter Valve Manual

Item N°	Port Size	Max Flow l /min
PM654	G 0.75”	150
PM598	G 1.0”	220

Diverter Valve Pneumatic

- 3 Port, 2 way
- Max Pressure 400 Bar

Item N° VD100

Item N°	Port Size	Max Flow l /min
VD075	G 0.75”	200
VD100	G 1.0”	250

Line Break Safety Check Valve

- Actuation Flow 200l /min
- Max Pressure 300 bar

Item N° HBV25

Hose Burst Safety Valve - Pilot Release

- Controlled Lowering
- Max. Pressure 210 bar
- Air Pilot Release 4-15 bar
- Nominal Flow 150 l/min

Item N° VHB100

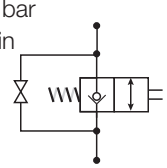

Flow Control Valve

- Port Size G0.75”
- Max. Pressure: 320 bar
- 0,04–120 l /min Flow adjustment

Item N° OV392

UT Series Tipping Valve – Single & Dual Pressure

Single & Dual Pressure

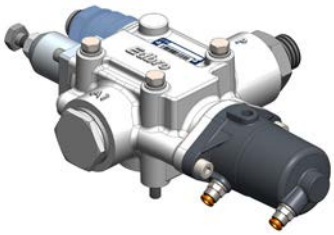

UT201 Single Pressure

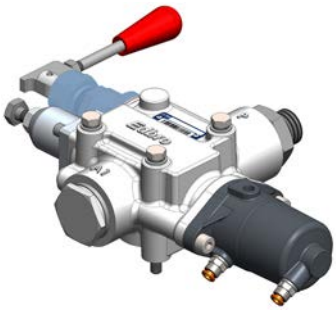

UT201 Dual Pressure

- Fully proportional - excellent lowering control when loaded
- No system filtration required
- High flow capacity for reduced cycle times
- Compact and lightweight
- Interchangeable with previous CT valve range
- Multiple mounting options
- Pressure switch point provided
- Single pressure or Dual pressure relief valve cartridges available
- Adjustable lowering speed
- Tamper proof pressure relief valve

Part number		Pump Inlet			Pressure (Bar)							
UT20x					P				/			
	M = 6mm air E = 1/4" mm air	075 = 3/4" BSP 100 = 1" BSP			Pressure setting 165, 175, 190, 220 No cartridge fitted 000 Dual Pressure 160/250							

Table below is a selection of popular variants. Other options available upon request

Part number	Description
UT201M075P000	Tip Valve to suit Ø6mm tube, 3/4"pump inlet & no relief valve
UT201M075P165	Tip Valve to suit Ø6mm tube, 3/4"pump inlet & 165 bar relief valve
UT201M075P175	Tip Valve to suit Ø6mm tube, 3/4"pump inlet & 175 bar relief valve
UT201M075P190	Tip Valve to suit Ø6mm tube, 3/4"pump inlet & 190 bar relief valve
UT201M075P160/250	Tip Valve to suit Ø6mm tube, 3/4"pump inlet &160 / 250 bar relief valve
UT201M100P000	Tip Valve to suit Ø6mm tube, 1"pump inlet & no relief valve
UT201M100P165	Tip Valve to suit Ø6mm tube, 1"pump inlet & 165 bar relief valve
UT201M100P175	Tip Valve to suit Ø6mm tube, 1"pump inlet & 175 bar relief valve
UT201M100P190	Tip Valve to suit Ø6mm tube, 1"pump inlet & 190 bar relief valve
UT201M100P160/250	Tip Valve to suit Ø6mm tube, 1"pump inlet & 160/250 bar relief valve

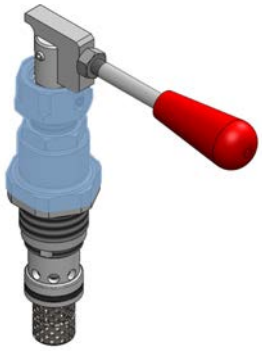

Dual Pressure relief valve
160/250 bar

Replacement pressure relief cartridges

Part number	Description
UTVC110150	Single Pressure Relief Valve Cartridge 150 bar
UTVC110165	Single Pressure Relief Valve Cartridge 165 bar
UTVC110175	Single Pressure Relief Valve Cartridge 175 bar
UTVC110190	Single Pressure Relief Valve Cartridge 190 bar
UTVC110220	Single Pressure Relief Valve Cartridge 220 bar
UTVC118	Dual Pressure Relief Valve Cartridge 160/250 bar

Single Pressure relief

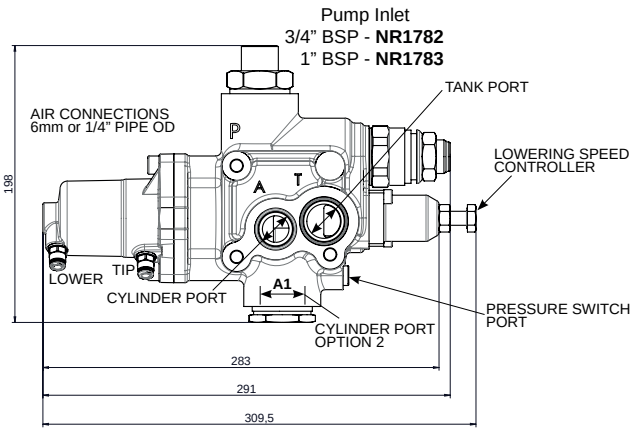

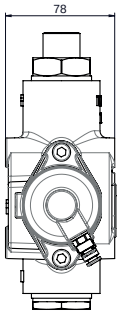

Tipping Valve - CE250

High return flow tipping valve with manual emergency operation, single and dual pressure.

- Flow Rate P-A: 250 l/min
- Return Flow A-T at 3 bar: 250 l/min
- Max. Operating pressure: 250 bar
- Inlet Port Size: 1”
- Outlet Port Size: 1”
- Return Line Port Size: 1”
- Pneumatic connection: 1/8“
- Pressure Cartridge (switchable):160 & 250 bar

Part N°	Description
CE250 - 150	Single Relief Valve Cartridge 150 bar
CE250 - 250	Single Relief Valve Cartridge 250 bar
CE250 - 2B	Dual Pressure Relief Valve Cartridge 160 / 250 bar

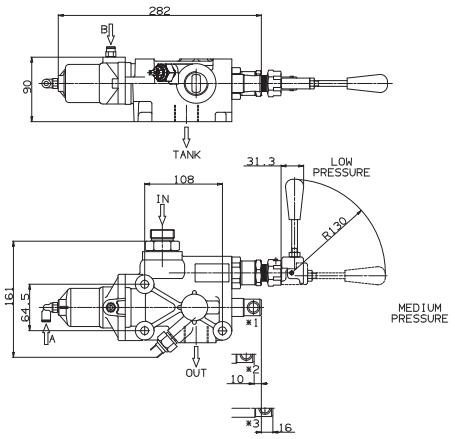

Multifunction Tip / Hydraulic Valve

Technical Features	CT151/1	CT151/2
Tip Valve Flow	250 l/min	250 l/min
Aux Control Flow	60 l/min	60 l/min
Max Working Pressure	320 bar	320 bar
Working Temp	-15° + 110 °C	-15° + 110 °C
Oil Viscosity	12-100 cSt	12-100 cSt
Oil Filtering Recommended	<25µm	<25µm
Standard Tip Valve Pressure Setting	160	160
Maximum Pneumatic Pressure	12 bar	12 bar

Tipping valve pressure drops

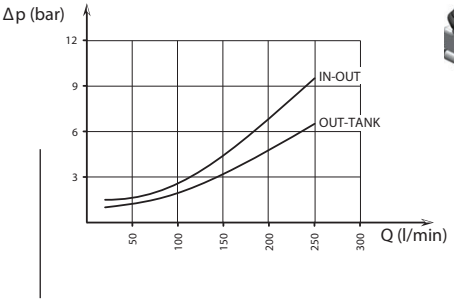

CT151 / 1DE Shown
CT151 / 2DE = 2x Auxillary Valve Block

Pressure Switch for CT / UT Valves

PM659
Pressure Switch
G1/8“ Male DIN 72 585-A1-2.1-Sn/K2

PM481
G1/8“ Male

DRS-18-SC
G1/8“ Male
Pressure Switch Deutsch DT04-2P

DRS-18-SC-ST
Connector + 2 Core Cable

Seal Kit UT2xx Tipping Valve

● Included Parts of the seal kit

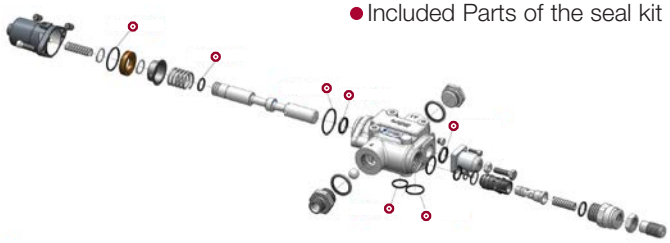

Item N° SKUT200
Item N° SKUT085

Mounting Kit for UT2xx Tipping Valve

Item N° KFD003

Chassis Mounting Bracket -CE / UT Valve

- Chassis Mounting Bracket - DMP 180, CE 250 und CT 200
- Item N° DMP180/CH

Body Raised Warning Kit

Item N° SA2924

Cab mounted Air Controls

Available as individual valves (SAxxxx) or kits complete with pneumatic tubing for installation (AVxxxx)

Hoist control without PTO switch

Hoist control with PTO switch

- Features
- Engineering polymer body with Integrated pneumatic fittings, 6mm or ¼”
- Proportional control
- Compact & lightweight
- Improved reliability
- PTO switch options with LED indicator

Hoist Control Mounting Bracket Options
For use with above controls

Item N°	Fitting
SA2903/V2	Dash Mount
SA2904/V2	Grab Handle Mount
SA2905/V2	Floor / Seat Mount

Weight	Operating Tempature	Air Condition	Maximum Working Pressure	Connecting Tube Material	Tube diameter	Voltage requirements
0.38Kg	-30° to +80°	Dry / Filtered	12 bar	12 bar	Ø6mm or ¼”	12-24v

Hoist Kit contents

The kit part numbers AVxxxP, comprise of:
- Hoist con oured nylon tube
- Cable ties
- Installation instruction
- 3 fixing screws to mount valve

ADVICE!

When installing ensure sufficient space for handle movement from vertical “LOCK” position. 32° Tip & 46° Lower

Specification

Kit Part Number	Valve Part Number	ØTube Fittings	Lock in Lower	Lock in Tip	CE Approved	PTO Control	Lamp	Exhaust Silencer
***AV241P**	**SA2894P**	6mm	Yes	No	Yes	-------	No	No
AV246P	SA2901P	6mm	Yes	Yes	No	-------	No	No
***AV243P**	**SA2896P**	6mm	Yes	No	Yes	Automatic	Yes	No
AV244P	SA2897P	6mm	Yes	Yes	No	Manual	Yes	No
AV242P	SA2895P	6mm	Yes	Yes	No	Automatic	Yes	No
AV245P	SA2898P	6mm	Yes	No	Yes	Manual	Yes	No
AV254P	SA2940P	1/4”	Yes	No	Yes	-------	No	No
***AV240P**	**SA2893P**	1/4”	Yes	Yes	No	-------	No	Yes
AV252P	SA2942P	1/4”	Yes	No	Yes	Automatic	Yes	No
AV251P	SA2941P	1/4”	Yes	Yes	No	Manual	Yes	No
AV 247P	SA2902P	1/4”	Yes	Yes	No	Automatic	No	Yes
AV253P	SA2943P	1/4”	Yes	No	Yes	Manual	Yes	No

Note: Brackets are available to mount the air control in cab. * - Indicated popular versions
All dimensions are given in mm unless otherwise stated. Technical Specifications are subject to change without notice.

Cab mounted Air Controls

Mounting Brackets for AV /SA Cab mounted Air controls

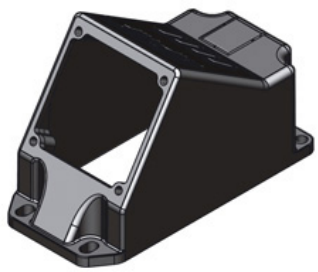

Air Control mounting bracket
beside seat SA2905/V2

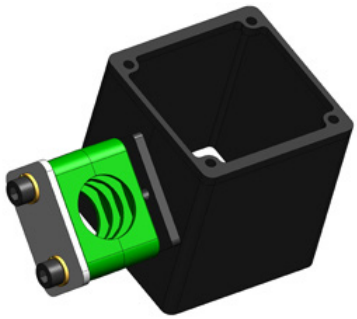

Air Control mounting bracket
Grab Handle Dia 25mm
SA2904/V2

Air Control mounting bracket
Dash Mount
SA2903/V2

Cab Mounted Air Control with Seperate PTO Switch

Narrow Cab Control

- Air valve of particularly narrow design
- Preferably used in vehicles such as DAF, MAN, IVECO, Mercedes- Benz, Volvo, Renault, Scania
- Whenever there is a lack of space between driver‘s seat and driver‘s door
- Proportional lowering
- Auxiliary PTO valve available and can be directly mounted to valve - Part No OB-A3-NA
- G1/8” x 6mm push in fittings supplied separately – Part N° AF38/V2 - Quantity x 3
- Lever lockable in TIP or Lower (Not CE approved)

Item N°: OB – A3
Air Connections APU38/V2
available separately

PTO Switch

- For mounting on Cab Control OB-A3

Item N°: OB-A3-NA

Air Connections APU38/V2
available separately

Compact Dash Mounted Cab Control

Compact dash mounted aircontrols complete with tubing connectors

SA2986
No PTO Switch

AV258P
Nylon air pipe
& install kit

SA2987
With PTO Switch

AV259P
Nylon air pipe
& install kit

1 = Air inlet
3 = Exhaust
21= Lift
22= Lower
23= PTO

Pneumatic Accessories

APU36/V2 - M12x1.5
Dia 6mm

APU38/V2 -
0.125“ BSP Dia 6mm

APU39 - Dia 6mm
Push in Tee Connector

C5 - M12 x 1.5 - Dia
6mm Tube

APE10 0.125“ BSP -
Dia 6mm Tube

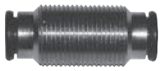

APU48 - Dia 6mm
Push in connector

TN2 - Plastic tube, Dia 6 x 1
- QTY 6m Blue and 6m Black

WVL 6 - Shuttle valve
3 x 0.125“ BSP ports

Vehicle Specific Mounting Brackets for the air control valve 0B-A3 LEFT HAND DRIVE VEHICLES

HP-TGA 1
MAN TGS, TGX

HP-TGA 2
MAN TGA

HP-AC 4
Mercedes Actros MP3
Mercedes Arocs narrow Cab

HP-AC2
Mercedes Actros
MP4
Scania

HP-IV
IVECO

HP-V
Volvo

HP-DAF1
DAF

HP-RE
Renault

HP-AC3
Mercedes Arocs, Antos

HP-DAF IV
DAF

Hydraulic Control Valves

1 Spool

Item N°

VCD20/1
VCD50/1
VCD90/1

2 Spool

Item N°

VCD20/2
VCD50/2
VCD90/2

3 Spool

Item N°

VCD20/3
VCD50/3
VCD90/3

4 Spool

Item N°

VCD20/4
VCD50/4
VCD90/4

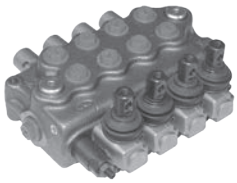

Port Sizes + Flow

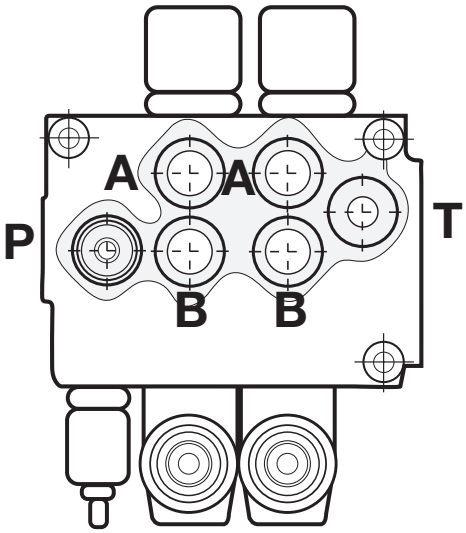

VCD	20/1	20/2	20/3	20/4	50/1	50/2	50/3	50/4	90/1	90/2	90/3	90/4
P -BSP G	0.375“	0.375“	0.375“	0.375“	0.5”	0.5”	0.5”	0.5”	0.75”	0.75”	0.75”	0.75”
T-BSP G	0.375“	0.375“	0.375“	0.375“	0.75”	0.75”	0.75”	0.75”	1”	1”	1”	1”
A-BSP G	0.375“	0.375“	0.375“	0.375“	0.5”	0.5”	0.5”	0.5”	0.75”	0.75”	0.75”	0.75”
B-BSP G	0.375“	0.375“	0.375“	0.375“	0.5”	0.5”	0.5”	0.5”	0.75”	0.75”	0.75”	0.75”
Flow (l/min)	45	45	45	45	70	70	70	70	160	160	160	160
Operating pressure (bar)	250	250	250	250	250	250	250	250	250	250	250	250
Weight Kg	3.5	5.2	6.9	8.1	6.1	8.8	11.4	14.2	12.7	18.6	23.8	28.8

**Contact Edbro for specific application, part numbers and prices*

Control Valve Accessories

Handle

VCD20-H
VCD50-H
VCD90-H

Cap

VCD20-KA
VCD50-KA
VCD90-KA

Control Block

VCD20-HK
VCD50-HK
VCD90-HK

Spring set

VCD20-FE
VCD50-FE
VCD90-FE

Control Block with safety lock

VCD20-HKB
VCD50-HKB
VCD90-HKB

Lever Hold Set “Detent” “

VCD20-RA
VCD50-RA

Pneumatic Operation *

VCD20-KIT8P
VCD50-KIT8P
VCD90-KIT8P

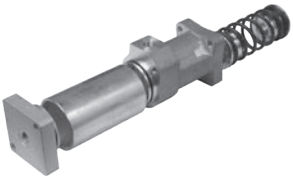

Dust Cap

VCD20-ST
VCD50-ST
VCD90-ST

Electropneumatic Actuator 24v *

VCD50/PE24

* To convert to pneumatic operation. Remove each spool cap VCD XX-KA and replace with VCD XX-KIT8P as required.

For solenoid operation add 2x VCD50/PE24 Electro Pneumatic actuators per spool. These are ordered seperately and fitted to VCD XX KIT8P.

Pressure and Return Swivel Arms

Advantages

Designed for use on commercial vehicles with tipper and walking floor hydraulics. Available with attachment bar for quick and easy installation.

- Maintenance Free
- Long service life with Integrated rotary Ball Bearings
- Low Height
- Simple installation = Reduced time
- Savings “v“ potential for damaged hoses
- Light weight: 2.8 kg
- Saves appox 1m of hydraulic hose
- Variety of connection options
- Minimises risk of oil spills due to twisted / frayed hydraulic hoses

SG350-J

SG600-J

Technical data

For item	SG350-J	SG600-J
Tube Length	350 mm	600mm
Overall length	420 mm	670mm
Height	90 mm	90mm
Operating pressure	250 bar	250bar
Weight	2,8 kg	3.8kg
Inside Diameter of tube	ca. 27 mm	ca. 27mm
Thread Connections	1” BSP Male	1” BSP Male

Rotational / Swivel Coupling without Extention tubes

Part N°	Description
NR1760	0.75” BSP Connections
NR1656	1” BSP Connections

Rotating support tray for hydraulic hoses

Swivel arm assembly, can be clamped to chassis of tractor unit and allows hydraulic hoses to sit in the tray and a pivot bearing allows hose tray to follow the movement of semi trailer.
Finished in Grey (RAL 7021) powder coat.

Overall Width	780 mm
Min‘ Distance between chassis flanges for mounting	585 mm
Overall Length	635 mm
Inside width of hose tray	86mm
Under side of tray to top of truck chassis variable	53-88mm

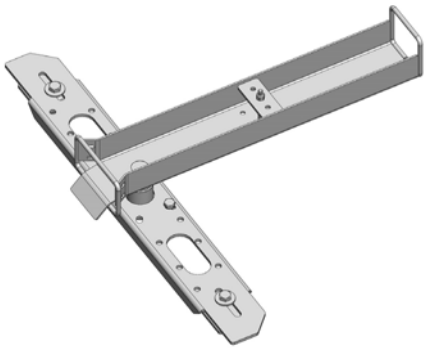

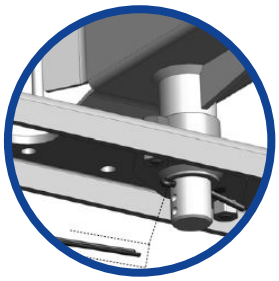

Part N°	Description
EF261J2	Rotating hose support tray

Mounting Assemblies

Modular Multifunctional Coupling and Valve Mounting Bracket

Modular coupling mounting bracket for valves, hose couplings and swivel adaptors.
Chassis mounting bar - 2 lengths 769mm & 980mm to suit variety of chassis widths - clamped in position (No drilling required).

Brackets with various hole sizes to accommodate different couplings.

Swivel arm parallel connection plates to enable (SG350-J & SG600-J) to move in parrallel. Chose appropriate connector plate dependent on distiance between swivel arms.

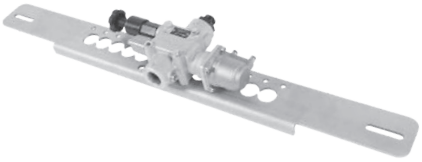

Item N°	Description
ZL-U-KL;KPL	Universal Mounting Assembly - Includes cross member, 2 x chassis clamp plates, screws, washers and nuts
ZL-U;KPL	Short Mounting Assembly - Includes cross member, screws, washers and nuts
	Additional Items (Order seperately to above)
SG-L223;KPL	Swivel arm parallel connection kit (Long) . Includes 2 x 223mm distance plates, screws, washers and nuts
SG-L169;KPL	Swivel arm parallel connection kit (Short) . Includes 1 x 169mm distance plate, screws, washers and nuts
KH43;KPL	Coupling Support Bracket (43mm hole) including screws, washers and nuts
KH33-SGH;KPL	Coupling Support Bracket (33mm hole) including screws, washers and nuts
KH45;KPL	Coupling Support Bracket (45mm hole) including screws, washers and nuts
KHU;KPL	Coupling Support Bracket (No hole) including screws, washers and nuts

ZL-U-KL;KPL

SG-L169;KPL

SG-L223;KPL

ZL-U;KPL

KH33-SGH;KPL

KH43;KPL
KH45;KPL

KHU;KPL

Hose Couplings

ARGUS HDK Coupling Fixed Half

Item N°	Thread "A"	Thread "B"	Hose Size
AG-F20KS	Rd 48x3	M 30 x 2	R 20
AG-F25KS	Rd 48x3	M 36 X 2	R 25
AG-F20KS3/4;kpl	Rd 48x3	0.75" BSP	-
AG-F25KS1;kpl	Rd 48x3	1" BSP	-

ARGUS HDK Coupling Loose Half

Item N°	Thread "A"	Thread "B"	Hose Size
AG-L20K	Rd 48x3	M 30 x 2	R 20
AG-L25K	Rd 48x3	M 36 x 2	R 25
AG-L20KS3/4;kpl	Rd 48x3	0.75" BSP	-
AG-L25KS1;kpl	Rd 48x3	1" BSP	-

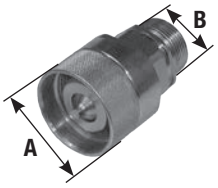

ARGUS HDK Dust Caps

Item N°	Thread Size	For
AG-ST55	M 48x3	Fixed Half
AG-ST45	M 32x2	Fixed Half
AG-STS55	M 48x3	Fixed Half
AG-STS45	M 32x2	Fixed Half

Quick Disconnect Couplings ISO "A" TYPE

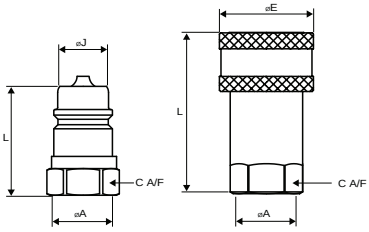

Size/Type	Item N°	ØA	L (mm)	ØE (mm)	ØJ (mm)	C (mm)	Rated flow (l/min)	Pressure Drop (bar)	MWP (bar)
0.75" Female	QDC075F/W/ISO	0.75" BSP	80	47	-	35	125	2	300
0.75" Male	QDC075F/ISO	0.75" BSP	57	-	29	35	125	2	300
0.75" Retainer	QDC075/ISO/R	0.75" BSP	57	-	-	-	-	-	-
0.75" Cover	QDC075/ISO/C	0.75" BSP	-	-	-	-	-	-	-
1" Female	QDC100F/W/ISO	1" BSP	94	55.5	-	41	270	2	250
1" Male	QDC100F/ISO	1" BSP	60	-	34.2	41	270	2	250
1" Retainer	QDC100/ISO/R	1" BSP	60	-	-	-	-	-	-
1" Cover	QDC100/ISO/C	1" BSP	-	-	-	-	-	-	-
1.5" Female	QDC150F/W/ISO	1.5" BSP	131	84	-	60	600	2	230
1.5" Male	QDC150F/ISO	1.5" BSP	84	-	55	60	600	2	230

Hose Couplings

Quick disconnect Couplings ISO Flat Face Coupling

Size/Type	Item N°	ØA	L (mm)	ØE (mm)	ØJ (mm)	C (mm)	Rated flow (l/min)	Pressure Drop (bar)	MWP (bar)
0.75” Female	QDC075FFF	0.75” BSP	84	37.8	-	100	100	2	350
0.75” Male	QDC075FFM	0.75” BSP	71	-	25	100	100	2	350
0.75” Female Cap	QDC075FFF/RC	0.75” BSP	-	-	-	-	-	-	-
0.75” Male Cap	QDC075FFM/RC	0.75” BSP	-	-	-	-	-	-	-
1” Female	QDC100FFF	1” BSP	99	45.5	-	230	230	2	350
1” Male	QDC100FFM	1” BSP	84	-	30	230	230	2	350
1” Female Cap	QDC100FFF/RC	1” BSP	-	-	-	-	-	-	-
1” Male Cap	QDC100FFM/RC	1” BSP	-	-	-	-	-	-	-
1.1/4“ Female	QDC125FFM	1.5” BSP	90	-	36	300	300	2	260
1.1/4“ Male	QDC125FFF	1.5” BSP	106	55	-	300	300	2	260
1.1/4“ Male Cap	QDC125FFM/RC	1.5” BSP	-	-	36	-	-	-	-

Quick disconnect Couplings QDC

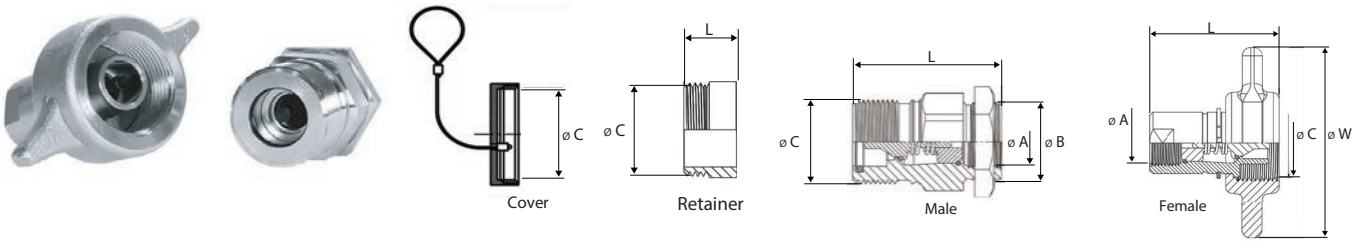

Size/Type	Item N°	ØA	ØB	ØC (mm)	L (mm)	W (mm)	Rated flow (l/min)	Pressure Drop (bar)	MWP (bar)
0.75” Female	QDC075F/W	0.75” BSP	-	44	75	115	93	2	350
0.75” Male	QDC075F	0.75” BSP	1.25” BSP	44	78	-	93	2	350
0.75” Retainer	QDC075/R	0.75” BSP	-	44	25	-	-	-	-
0.75” Cover	QDC075/C	0.75” BSP	-	44	13	-	-	-	-
1” Female	QDC100F/W	1” BSP	-	54	80	115	140	2	300
1” Male	QDC100F	1” BSP	1.25” BSP	-	83	-	140	2	300
1” Retainer	QDC100/R	1” BSP	-	54	25	-	-	-	-
1” Cover	QDC100/C	1” BSP	-	54	18	-	-	-	-

Fittings

Elbow 90°

Item N°	Male	Female
NR633	0.5”	0.5”
NR627	0.75”	0.75”
NR634	1”	1”
NR1776	1.25”	1.25”

Elbow 45°

Item N°	Male	Female
NR1712	0.75”	0.75”
NR634-45	1”	1”

Nipple

Item N°	Male	Male
N611/45	0.75”	0.5”
NR611/42	0.75”	0.75”
NR611/27	1”	0.75”
NR611/43	1”	1”
NR611/53	1.25”	1.25”
NR611/47	1.25”	1”
NR611/40	1.25”	0.75”
NR611/48	1.5”	1.25”
NR611/52	1.5”	1.5”

Bulkhead Connector

Item N°	Male	Male
NR1663	0.75”	0.75”
NR1662	1”	1”
NR1743	1.25”	1.25”

CT201 Only

Item N°	Male	Male	Comment
NR1675	0.75”	0.75”	Tank Port
NR1676	0.75”	1”	Tank Port
NR1702	0.75”	0.75”	Pump Port
NR1703	0.75”	1”	Pump Port

Female Straight Connector - Positional

Item N°	Female	Female
NRF3/4-F3/4	0.75”	0.75”
NRF1-F1	1”	1”
NRF1-G20	1”	M30 x2
NRF1-G25	1”	M36 x2

Reducer Male / Female Positional

Item N°	Male	Female
NRM3/4-F3/4	0.75”	0.75”
NR1658	0.75”	1”
NRM1-F3/4	1”	0.75”
NR1659	1”	1”
NR1751	1.25”	1”

Tee-Connector

Item N°	Male	Male	Male
NR1701	0.5”	0.5”	0.5”
NR1698	0.75”	0.75”	0.75”
NR1753	1”	1”	1”

Reducer

Item N°	Male	Female
RI3/8-1/2	0.375”	0.5”
NR1686	0.5”	0.75”
RI3/4-1	0.75”	1”
RI1-3/4	1”	0.75”

Plug – Hex Socket Head

Item N°	Male
NR1687	0.5”
VSTI3/4	0.75”
VSTI1	1”

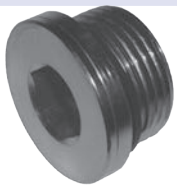

Plug Hex Head

Item N°	Male BSP
NR1759	0.125“
NR994/2	0.5”
NR994	0.75”
NR994/4	1”
NR994/5	1.25”
NR994/8	1.5”

Doughty Washer

Item N°	Thread	d (mm)
DPP45A/SC	0.125“	10
DPP45B/SC	0.25“	13
DPP45C	0.375“	17
DPP45D/SC	0.5”	21,5
DPP45F/SC	0.75	27
DPP45H/SC	1”	33
DPP45J/SC	1.25”	43
DPP45K/SC	1.5”	49
DPP45M	2”	60
DPP45N	2.5”	76

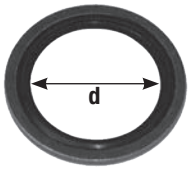

/SC = Self Centering

Walking Floor and Tanker Hydraulic Couplings

Advantages

- Hydraulic unit consisting of pressure and return with integrated pressure relief valve.
- Designed specifically for walking floor and tanker hydraulic systems.
- Simplified chassis mounting, in front or behind fifthwheel coupling.
- Install, Connect, Complete.

Technical Features

- Maximum Working Pressure - 250bar.
- Maximum flow 150 l/min.
- Connections - 1” BSPP.
- Length 800mm.
- Inclination angle of valve block 10° (Version without swivel arms).

Item N°	Description
ZL-SB-K1;kpl	Kufa Block - Clamp Mounting 10° angle
ZL-SB-K2;kpl	Kufa Block - Bolted Mounting 10° angle

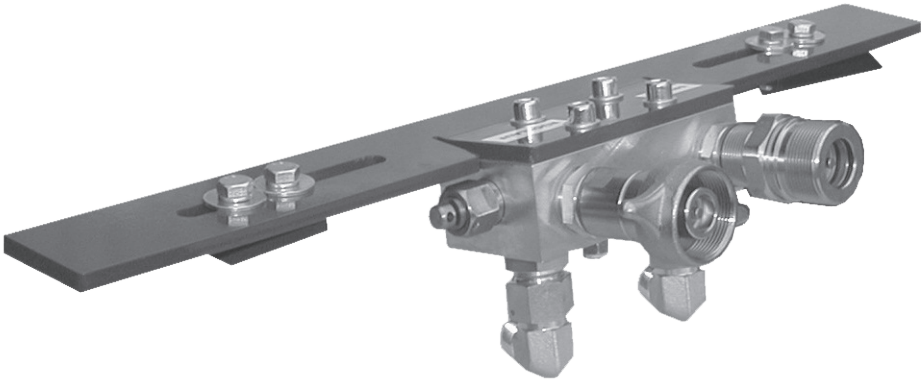
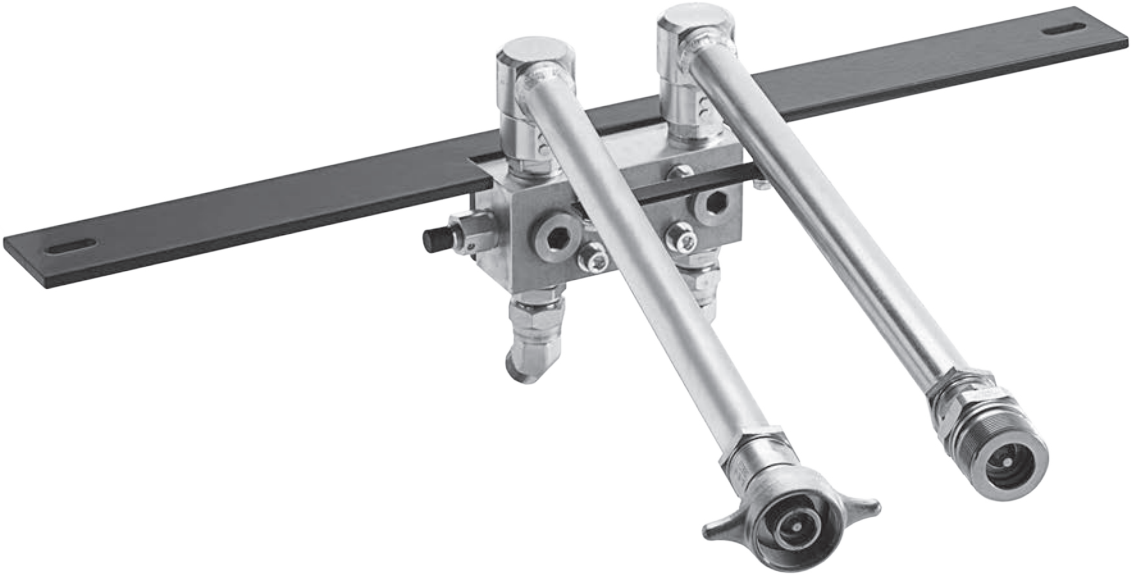
Item N°	Description
ZL-SB-K3;kpl	Kufa Block with Swivel tubes 350mm lg - Bolted Mounting
ZL-SB-K4;kpl	Kufa Block with Swivel tubes 600mm lg - Bolted Mounting